Shenzhen Fuzhe Technology Co.,Ltd.
Add:C209,Yuanzheng,Bantian,Longgang District,Shenzhen,Guangdong,China.518129
Tel:+86 755 84528255 Email: kf178@163.com www.fulaser.com

405nm 100mW 100-1000ps 100kHz to 80MHz PICOSECOND PULSED VIOLET DIODE LASER

It features integrated electronics,repetition rate 100kHz to 80MHz, synchronized signal output. Fast ON/ OFF/multiplexing capability. Suitable for fluorescence excitation, time resolve spectrum, highly sensitive absorption spectroscopy, etc.

Specifications

型号Model No.	FU-MDL-PS-405100
波长Wavelength (nm)	405±5
峰值功率Peak Power (mW)	1~100
功率稳定性Power stability(rms, over 4 hours)	<3%, <2%, <1%
脉宽Pulsed width(ps)	100~1000 (unadjustable)
横向模式Transverse mode	Near TEM00
工作方式Operating mode	Pulsed
用户触发频率User trigger frequency	100kHz~20MHz (Internal trigger available) or
孔径处光束直径Beam diameter at the aperture(1/e²,mm)	~1.2
光束发散角Beam divergence, Full Angle(mrad)	~1.0
预热时间Warm-up time(minutes)	<5
光束高度Beam height from base plate(mm)	26.5
工作温度Operating temperature(℃)	10~35
供电电压Operating voltage	DC12V 4A
保修期Warranty Time	1 year
激光头尺寸Laser head dimension(mm) / Weight	191(L)×100(W) ×58(H) mm3 , 1.2kg
电源尺寸Power supply dimension(mm) / Weight	121(L) ×50(W) ×31(H) mm3 , 0.3kg

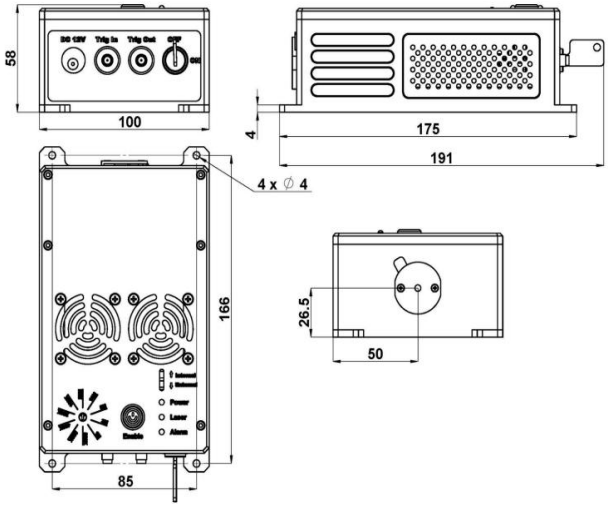

191(L)×100(W) ×58(H) mm³, 1.2kg

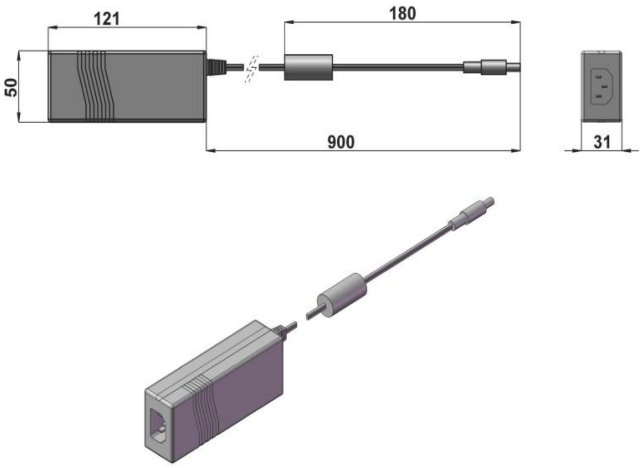

121(L) ×50(W) ×31(H) mm³, 0.3kg

Copyright (c) Shenzhen Fuzhe Technology Co., Ltd.