Shenzhen Fuzhe Technology Co.,Ltd.
Add:C209,Yuanzheng,Bantian,Longgang District,Shenzhen,Guangdong,China.518129
Tel:+86 755 84528255 Email: kf178@163.com www.fulaser.com

473nm 1-300mW SINGLE LONGITUDINAL MODE LASER

All solid state single longitudinal mode laser is made features of ultra compact, long lifetime, low cost and easy operating, which is used in DNA sequencing, flow cytometry, cell sorting, optical instrument, spectrum anallysis, interference, measurement, holography, physics experiment, etc.

Specifications

型号Model No.	FU-MSLFN-473300
波长Wavelength (nm)	473±1
输出功率Output Power (mW)	1~300
功率稳定性Power stability(rms, over 4 hours)	<5%, <3%, <2%
横向模式Transverse mode	TEM00
纵向模式Longitudinal mode	Single
工作方式Operating mode	CW
光谱线宽Spectral line width(nm)	<0.00001
相干长度Coherent length(m)	>50
振幅噪声Noise of amplitude(rms, 1Hz~20MHz)	<1%, 0.5%(可选)
光束质量因子M² factor	<1.2
孔径处光束直径Beam diameter at the aperture(1/e²,mm)	<2.0
光束发散角Beam divergence, Full Angle(mrad)	<1.2
偏振比Polarization Ratio	>100:1, Vertical(Horizontal for optional)
预热时间Warm-up time(minutes)	<5
预热后指向稳定性Pointing stability after warm up(mrad)	<0.05
超过8小时的频率偏移Frequency shift over 8 hours(MHz)(Optional)	<±200
随温度的频率偏移Frequency shift with Temp.(MHz/℃)(Optional)	<200
光束高度Beam height from base plate(mm)	27.4
激光头功耗Laser head consumption(W)	15(Typical), <25(40℃)
最大激光头基板温度Max laser head base plate Temp(℃)	50
工作温度Operating temperature(℃)	10~35
供电电压Power supply(90-264VAC)	FU-PSU-H-FDA
保修期Warranty Time	1 year
激光头尺寸Laser head dimension(mm) / Weight	197*70*50(L*W*H) / 1.5kg
电源尺寸Power supply dimension(mm) / Weight	276.6*145*103.6(L*W*H) / 2.3kg

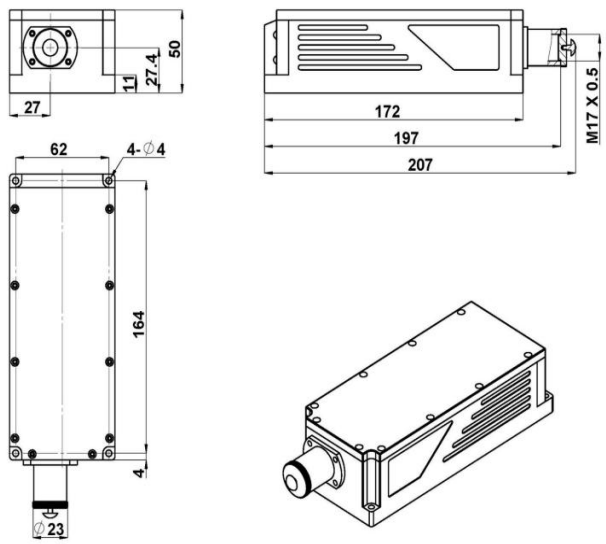

197(L)×70(W)×50(H) mm³, 1.5 kg

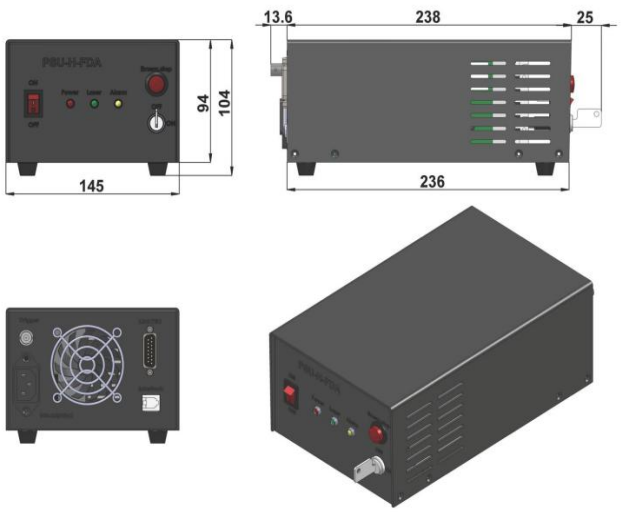

276.6(L) ×145(W) ×103.6(H) mm³, 2.3 kg

Copyright (c) Shenzhen Fuzhe Technology Co., Ltd.